Naval and Marine NavMPS Users

Supporting the Fleet

Jim Cleer
PMA-233L
Naval Air Systems Command

Overview

- JMPS is the Automated Mission Planning System of the future.
- Legacy Automated Mission Planning Systems are deployed and employed on several major US Naval Combatants.
  - On board CV/CVN's and the Gator Fleet.
- Used by most aircraft in the inventory.
- Streamlined Sustainment Concept
- NavMPS Product Support Website

Customers

- 54 Navy and Marine Corps Air Bases
- 13 Aircraft Carriers
- 12 Amphibious Assault Ships (LHA/LHD)
- 14 Training Centers
- 262 Navy and Marine Corps Squadrons

- 270 deployed ULTRA Systems
- 19 Installed E-4000 and 2300 ULTRA Backup Servers
- 755 N-PFPS Laptops deployed
- 195 Micron PC systems for School house use
- 1100 copies of N-PFPS software distributed to the Fleet
- Over 4000 MPS users

Ships and Aircraft

CV CVN

F/A-18
F-14
EA-6B
E-2C
S-3B
P-3C
EP-3
AV-8B
V-22A
CH-46
CH-53
H-3H
C-130

C-9
C-2A
C-12
E-6A
T-2C
T-34C
T-45A
T-6A
MH-53E
SH-60
TH-57
AH-1
UH-1

LHD LHA

Ships

- Aircraft Carriers
  - CV's
    - USS KITTY HAWK (CV-63)
    - USS CONSTELLATION (CV-64)
    - USS JOHN F. KENNEDY (CV-67)

Ships (cont.)

CVN'S

- USS ENTERPRISE (CVN-65)
- USS NIMITZ (CVN-68)
- USS EISENHOWER (CVN-69)
- USS CARL VINSON (CVN-70)
- USS THEODORE ROOSEVELT (CVN-71)
- USS ABRAHAM LINCOLN (CVN-72)
- USS GEORGE WASHINGTON (CVN-73)
- USS JOHN C. STENNIS (CVN-74)
- USS HARRY S. TRUMAN (CVN-75)
- USS RONALD REAGAN (CVN-76)

Ships (cont.)

- AMPHIBIOUS ASSAULT
  - LHD

- USS WASP (LHD-1)
- USS ESSEX (LHD-2)
- USS KEARSARGE (LHD-3)
- USS BOXER (LHD-4)
- USS BATAAN (LHD-5)
- USS BON HOMME RICHARD (LHD-6)
- USS IWO JIMA (LHD-7)

Ships (cont.)

- Amphibious Assault (cont.)
  - LHA
    - USS TARAWA (LHA-1)
    - USS SAIPAN (LHA-2)
    - USS BELLEAU WOOD (LHA-3)
    - USS NASSAU (LHA-4)
    - USS PELELIU (LHA-5)

Aircraft

FIGHTER AND ATTACK

F/A-18 HORNET

F-14 TOMCAT

Aircraft

EA-6B PROWLER

AV-8B HARRIER

Aircraft (cont.)

Support Aircraft

- S-3B VIKING (SSSC and Refueling)
- E-2C HAWKEYE (AEW and CC)
- E-6A TACAMO

Aircraft (cont.)

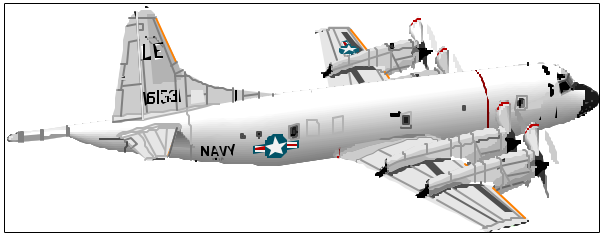

- Patrol Aircraft
  - P-3C ORION (ASW)
  - EP-3 ORION (EW Reconnaissance/Surveillance)

Aircraft (cont.)

Logistics

- C-2A GREYHOUND (COD)
- C-9 SKY TRAIN (Shore Based Logistics)
- C-12 (Shore Based Logistics)
- C-130 Hercules (Shore Based Logistics)

Aircraft (cont.)

- Training Command Aircraft
  - T-34C
  - T-2C
  - T-45A
  - T-6A

Aircraft (cont.)

Rotary Wing Aircraft

CH-46 Sea Knight
CH-53 Sea Stallion
H-3H Sea King
MH-53E Sea Dragon
TH-57 Sea Ranger
SH-60 Sea Hawk
HH-60
AH-1 Cobra
UH-1 Huey
V-22A Osprey

Weapons

JSOW - Joint Stand-Off Weapon
JDAM- Joint Direct Attack Munition
HARM- High speed Anti-Radiation Missile
SLAM and SLAM-ER (Stand-off Land Attack Missiles)

Fleet Sustainment Concept

1-888-826-7748

mpshelp@spawar.navy.mil

233mps@philly.navy.smil.mil

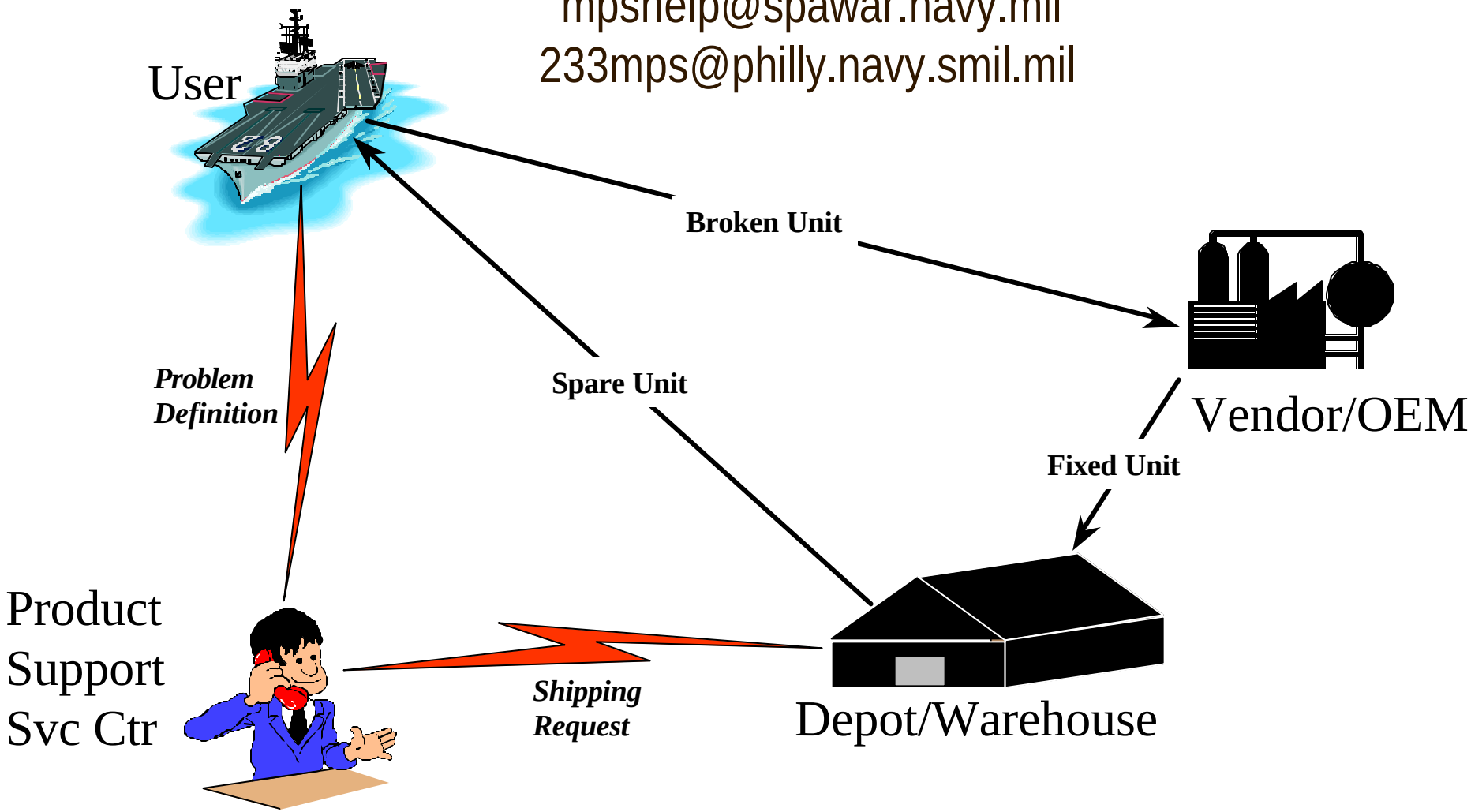

NavMPS Home - Netscape

File Edit View Go Communicator Help

Back Forward Reload Home Search Netscape Print Security Stop

Bookmarks Netsite: https://mps.chinalake.navy.mil/ What's Relate

NavMPS

Naval Mission Planning Systems

calendar

contact mgr.

links

search

site map

help

A4z8mJ^@

Change Password

Products

PMA-233

SSA

Product Support

News

Library

DOORSNet

MPS Registration *Event Registration* *IMPWG* *OAG*

Document: Done

Netsite: https://mps.chinalake.navy.mil/isea/

Product Support Pages

One stop shop for all your Mission Planning Product Support needs

mpshelp@nosc.mil **(888) 816-7748**

Customer Support	FAQS	Skuttlebutt	Virtual Office	Training	Organizational Chart

NavMPS Fleet Support Team

SPAWAR
Systems Center San Diego
C4I Programs Office, Philadelphia

PMA-233
Captain Moebius

Fleet Support Jim Cleer	**Fleet Support Liaison** Lt. Blau
Systems Engineering LCDR Neace	**Hardware Acquisiton Mgmt** Dan Wright

NavMPS ISEA Lead
Steve Fox (G)

Deputy
Karen Levine (G)

Administrative
Megan Kelly (C)

Budget
Barbara Wiley (G)

Procurements
Rhea Feldman (G)

NAME	PHONE #
Steve Fox	(215) 214-8060
Karen Levine	(215) 214-8061
Barbara Wiley	(215) 214-8012
Rhea Feldman	(215) 214-8014
Bob Grant	(215) 214-8085
Dave Salmon	(215) 214-8111
Beth Miles	(215) 697-5095
Mary Williams	(215) 697-4992
Paul Meisinger	(215) 214-8039
Dennis Klinger	(215) 214-8031
Paul Steinbacher	(215) 214-8024
Chuck Storicks	(215) 214-8008
Judy Jolly	(215) 214-8025
Craig Doster	(215) 214-8118
Worlie Blackwell	(215) 214-8046
J.C. Fitzgerald	(215) 214-8103
Tim Boyce	(215) 214-8048
Ed Dolecki	(215) 214-8065
John Sheplock	(215) 214-8048
Mike Slough	(215) 214-8049
Fran Brown	(215) 214-8071

Fleet Installation
Dave Salmon (G)

FIT Team
Fran Brown (G)
Ira Riley (C)
Gordon Frazier (C)
Kevin O'Malley (C)
Peter Ingraham (C)
Bill Chesser (C)
Dean Pfeiffer (C)
Melody Wesley (C)

Integration Team
John Heisler (C)
John Shields (C)

Fleet Support
Bob Grant (G)

Deployment Team
Jim Smith (C)
Jesse Yarbrough (C)
Eduardo Emett (C)
Shantel Taylor (C)
Patrick Watts (C)
Frank Lombrana (C)

Customer Support Desk
Mike Brabant (C)
Vince Matarazzo (C)
Mark Lomax (C)
Chris Reneau (C)
Audrey Lynch (C)

Fleet Logistics
Chuck Storicks (G)

Paul Steinbacher(G)
Mary Williams (G)
Beth Ann Miles (G)
Judy Jolly (G)
Craig Doster (G)
JC Fitzgerald (G)
Tim Boyce (G)
John Sheplock (G)
Mike Slough (G)

Richard Brown (C)
Geo. Weisgerber (C)
Frank Normoyle (C)
Darrin Allen (C)
Mike Hess (C)
Fred Sambuca (C)
Kelly Crabtree (C)
Dave Sohn (C)

System Engineering
Paul Meisinger (G)

Nhan Nguyen (G)
Worlie Blackwell (G)
Chris Labohne (G)
Ed Dolecki (G)
Dennis Klinger (G)
Vacant (G)

Steve Fleeger (C)
Glenn Hansel (C)
Mike Ross (C)
Joe Mountain (C)
Asghar Bilgrami (C)

Netsite: https://mps.chinalake.navy.mil/isea/

Product Support Pages

One stop shop for all your Mission Planning Product Support needs

mpshelp@nosc.mil **(888) 816-7748**

Customer Support	FAQS	Skuttlebutt	Virtual Office	Training	Organizational Chart

Naval Mission Planning Systems

PMA-234

https://mps.chinalake.navy.mil/isea/CustomerSupport.htm

Customer Support

Web Page Applicability Report for Product Support ocumentation	Document Listing
Excel spreadsheet listing all documentation (download)	Weblist

The NavMPS Team recommends the use of the Adobe Acrobat 4.0 reader to access the following documents. If you don't already have this latest viewer, follow the link provided below to obtain it for your use.

Get Acrobat Reader

Files not linked under the "*Document Name*" heading are not yet available for download

Document Number	Document Name	Document Date
N/A	Guidelines For Ordering NIMA Products	N/A
N/A	Disposal of NIMA Products	N/A
SPAWAR GSC 102,Rev.1	Getting Started with your TAMPS Desktop Portable - 8 Bay	07/16/98
SPAWAR-GSC-103	Getting Started with your TAMPS Desktop Portable - 9 Bay	02/26/99

Acrobat Reader - [Gsc104.pdf]

File Edit View Tools Window Help

SPAWAR-GSC-104

GETTING STARTED WITH YOUR N-PFPS LAPTOP PERSONAL COMPUTER

① Unpack Your System

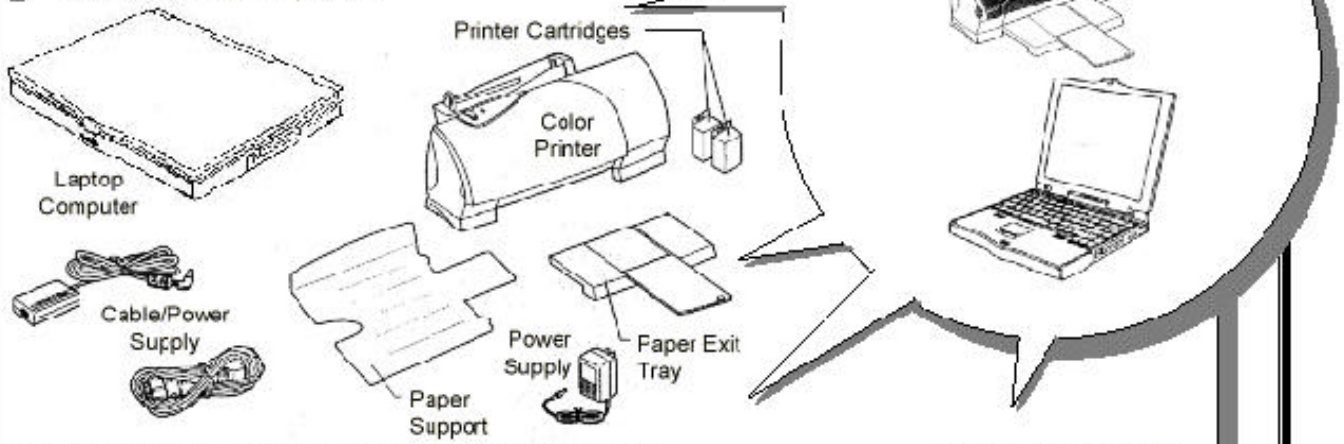

The following is included with your laptop system

Panasonic CF-35 Notebook Computer	3.5 -Inch Floppy Drive	**Installed Software**
3.2GB HD (Installed)	Xircom Ethernet/Modem PCMCIA Card (Installed)	
10x CD-ROM (Installed)	Xircom Ethernet/Modem PCMCIA Adapter	N-PFPS v3.01
Laptop Carrying Case	Laptop Operators Guide	Microsoft Office 97
Lexmark 5700 Inkjet Color Printer	Printer Cables/Cartridges	NT v4.0
CD's and Associated Documentation	Printer Documentation	Netscape
Service Pads	Drivers For PCMCIA	McAfee (V-Shield)

② Connect and Power On Your System

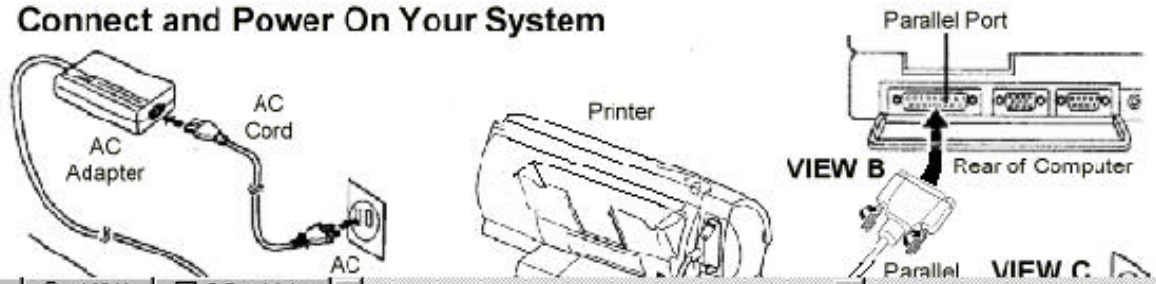

Page 1 of 2 | 140% | 8.5 x 11 in